| RevNo | Revision note | Date | Signature | Checked |
|---|---|---|---|---|
| V1.0 | Sketch only | 20/06/2024 | | |

RoHS Compliant.

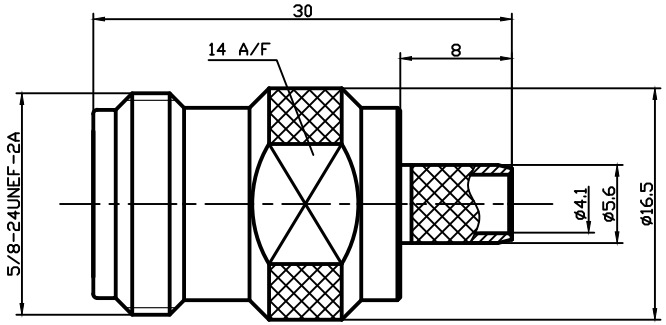


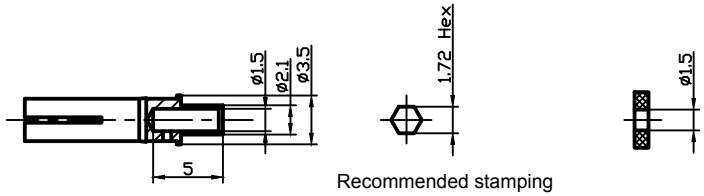


Recommended stamping hexagonal die size (Inserting pin)

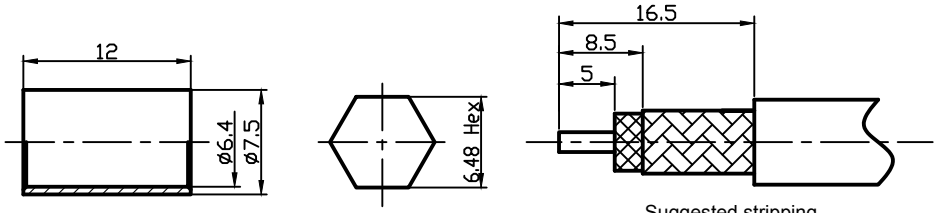


Recommended stamping hexagonal die size (cannula)

Suggested stripping

**Interface Per:** MIL-STD-348, IEC 60169-16
**Cable Type:** LMR240

## Material & Finishing:

1. Center condutor: Phosphor bronze, Gold Plating
2. Insulators: PTFE
3. Body : Brass, Ternary alloy Plating
4. Crimping Ferrule: Soft Copper,Nickel Plating

## Electrical Data:

1. Impedance: 50 Ohms
2. Frequency: 0~6GHz
3. VSWR: ≤1.15 @ 900MHz,
   ≤1.2 @ 1800MHz,
   ≤1.3 @ 3000MHz,
   ≤1.4 @ 6000MHz,
4. Insertion loss: ≤0.05dB @ 900MHz,
   ≤0.05dB @ 1800MHz,
   ≤0.05dB @ 3000MHz,
   ≤0.05dB @ 6000MHz,
5. Dielectric Withstanding voltage:1000V Min
6. Voltage Rating : 500V Max

**Package :** 1 PC per bag
**Laser Mark:** LenoRF

Label Content:

LenoRF
Part No: 3.04.0265
Part Name: N JACK FOR LMR240 CABLE
QTY: 1 PC
Date: WW/YY (Week/year)

| Unless otherwise specified, tolerances as below: | Material: | See Notes | Weight | g | LenoRF | |
|---|---|---|---|---|---|---|
| .x ±0.15 | Finish: | See Notes | Scale | 8 : 1 | | |
| .xx ±0.1 | Unit | mm | Page | 01 | | |
| .xxx ±0.05 | REV. | V1.0 | p/n | 01 | DWG NO. | 3.04.0265 |
| Angle: ±2° | | | | | | |
| Drawn | | DATA: | Projection | | Cust P/N. | TBD |
| Checked | | DATA: | Title: | N JACK FOR LMR240 CABLE | | |
| Approved | | DATA: | | | | |