RevNo	Revision note	Date	Signature	Checked
V1.0	Sketch only	04/05/2025		

RoHS Compliant.

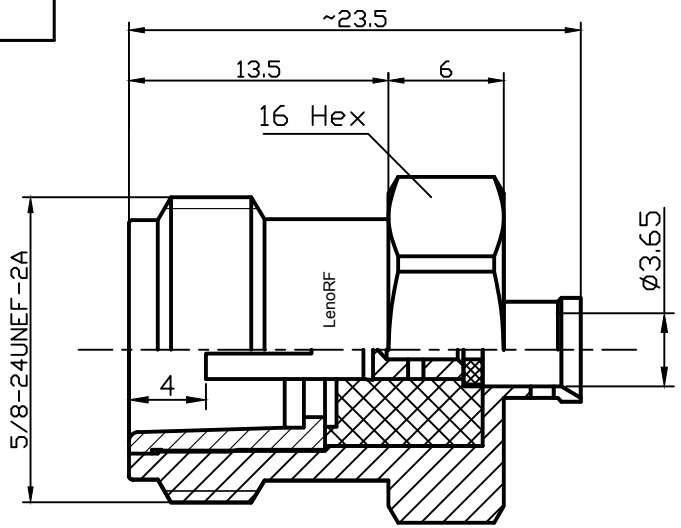

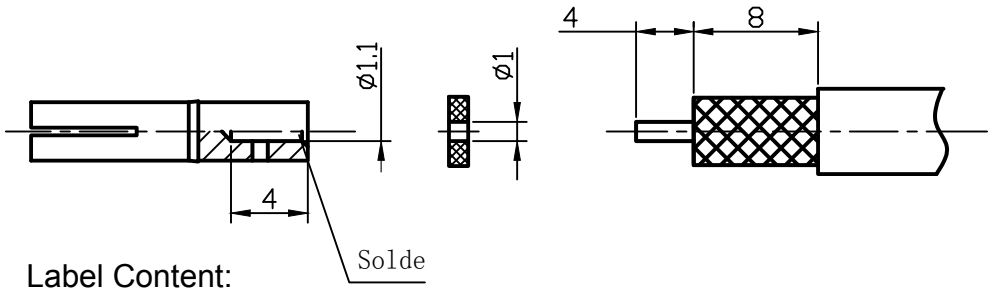

Interface Per: MIL-STD-348, IEC 60169-16
Cable Type: 670-141 SXE

Material & Finishing:

1. Center condutor: Brass, Gold Plating
2. Insulators: PTFE
3. Body : Brass, Ternary alloy Plating

Electrical Data:

1. Impedance: 50 Ohms
2. Frequency: 0~6GHz
3. VSWR: ≤1.12 @ 900MHz,
   ≤1.15 @ 1800MHz,
   ≤1.2 @ 3000MHz,
   ≤1.35 @ 6000MHz
4. Insertion loss: ≤0.05dB @ 900MHz,
   ≤0.05dB @ 1800MHz,
   ≤0.05dB @ 3000MHz,
   ≤0.1dB @ 6000MHz
5. Dielectric Withstanding voltage:1000V Min
6. Voltage Rating : 500V Max

Package : 1 PC per bag
Laser Mark: LenoRF

Label Content:

LenoRF
Part No: 3.04.0289
Part Name: N PLUG SOLDER FOR 670-141 SXE CABLE
QTY: 1 PC
Date: WW/YY (Week/year)

Unless otherwise specified, tolerances as below:	Material:	See Notes	Weight	g	LenoRF	
.x ±0.15	Finish:	See Notes	Scale	8 : 1		
.xx ±0.1	Unit	mm	Page	01		
.xxx ±0.05	REV.	V1.0	p/n	01	DWG NO.	3.04.0289
Angle: ±2°						
Drawn		DATA:	Projection		Cust P/N.	TBD
Checked		DATA:	Title:	N JACK FOR 670-141 SXE CABLE		
Approved		DATA:				