RevNo	Revision note	Date	Signature	Checked
V1.0	Sketch only	30/08/2025		

RoHS Compliant.

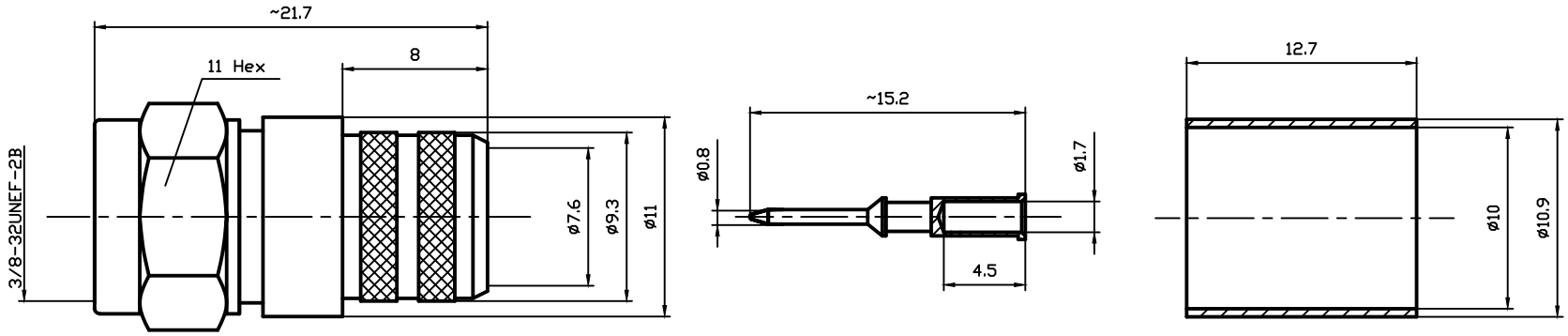

Interface Per: MIL-STD-348, IEC 60169-8
Cable Type: RF400-75

Material & Finishing:

1. Center conductor: Brass, gold plating
2. Insulators: PTFE
3. Body : Brass, Nickel Plating
4. Crimping Ferrule: Soft Copper,Nickel Plating

Electrical Data:

1. Impedance: 75 Ohms
2. Frequency: 0~1GHz
3. VSWR: 1.4 Max
4. Proof Voltage : 1.5 KVeff
5. Working voltage: 500 Veff

Unless otherwise specified, tolerances as below: .x ±0.15 .xx ±0.1 .xxx ±0.05 Angle: ±2°	Material:	See Notes	Weight	g	LenoRF
	Finish:	See Notes	Scale	8 : 1	
	Unit	mm	Page	01	
	REV.	V1.0	p/n	01	DWG NO. 3.10.016
Drawn		DATA:	Projection		Cust P/N. TBD
Checked		DATA:	Title: F PLUG CONNECTOR FOR CABL .RF400-75		
Approved		DATA:			